

THERMAL

PRO

A Spartan Forest Products Brand

335 N. Constitution Avenue
New Freedom, PA 17349
P: 336-574-0111 | sales@thermalprowood.com
thermalprowood.com

SLATS & OPEN RAINSCREEN PRODUCTS

THERMAL
PRO



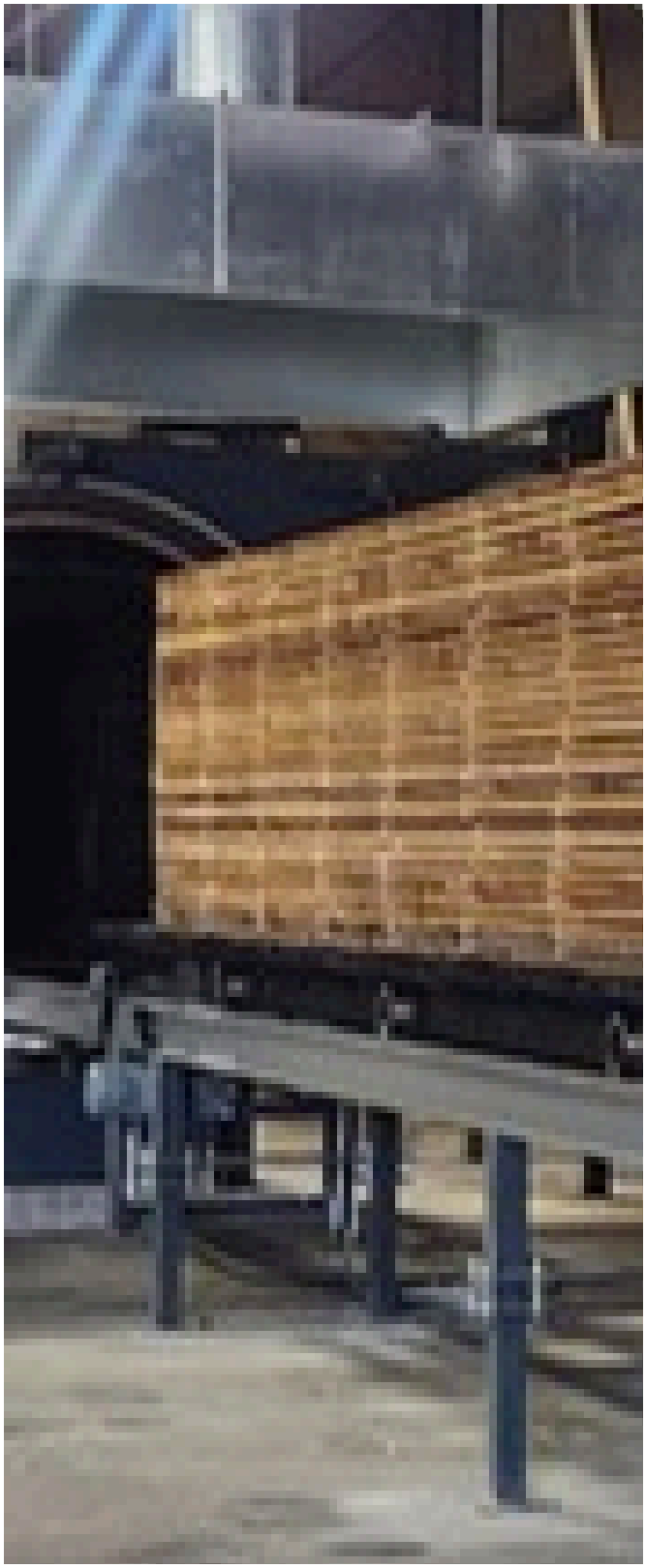

ADVANCING THE WAY WOOD IS MODIFIED

Hydrolysis 2.0 Thermal Modification Process

Thermal modification has long been used to improve the performance of wood. Hydrolysis 2.0 takes that technology further. By combining lower temperatures with controlled pressure, it provides a more precise approach to modifying wood at the cellular level.

From High Heat to Controlled Modification

Traditional thermal modification relies on extremely high temperatures to transform the wood. Hydrolysis 2.0 takes a different approach—using high pressure to accelerate the process while reducing the temperature required for modification. The result is a more controlled process with less thermal stress than conventional high-heat treatment.

Better Performance Starts With a Better Process

Hydrolysis 2.0 is engineered to address some of the limitations associated with conventional thermal modification:

- Up to 50% less brittleness compared with conventional high-temperature processing
- Improved structural integrity by reducing damage to the wood's cellulose fibers
- Better machinability for milling, profiling, and fabrication
- More consistent modification from surface to core
- Reduced thermal stress throughout the material
- Lower energy requirements than traditional high-temperature processes

The result is a thermally modified material that is stronger, more workable, and more predictable.

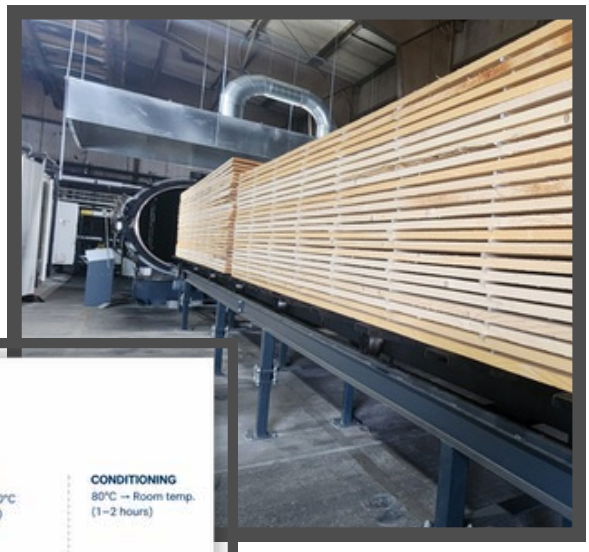

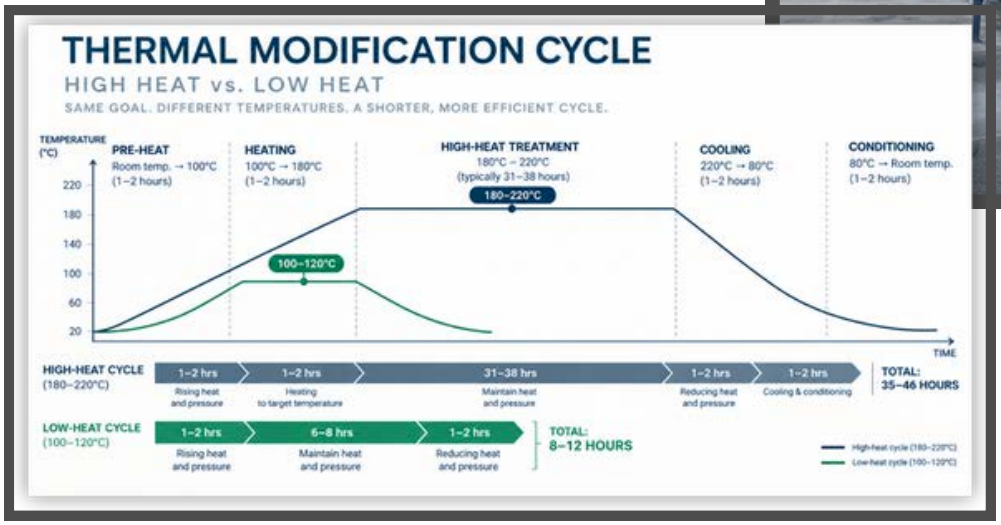

ENHANCED BENEFITS



Increased Durability

Lower-temperature processing reduces damage to the wood's cellular structure, preserving more of its natural strength while still delivering the moisture resistance and decay protection of thermal modification. The result is tougher, less brittle wood built for long-term performance.



Improved Aesthetics

Lower-temperature modification preserves more of the wood's natural color, grain, and character, giving designers greater control over the final aesthetic while delivering enhanced stability and durability.



More Species

Reduced thermal stress allows ThermalPro to modify a broader range of wood species that may not tolerate conventional high-heat processing—giving architects and designers access to lighter colors, rustic grades, and greater natural character.



Larger Dimensions

High pressure drives modification deep and evenly through the wood, while lower temperatures reduce the risk of overheating the exterior. This combo enables thorough modification of larger dimensions, including timbers up to 8", expanding possibilities for substantial architectural elements.

Movement Resistant

Weather Resistant

Non-Toxic

Longer Lifespan

High Solar Index

Sustainable & Renewable

Why Specify ThermalPro Wood?

More species. Larger dimensions. Made for your design.
ThermalPro Wood combines the beauty of natural wood with **advanced performance** and made-to-order flexibility. From species and dimensions to custom profiles and finishes, we work with architects and designers to create solutions tailored to the project—not limited by a standard product line.

Our low-temperature, high-pressure technology delivers a more stable, durable, and workable material with greater **freedom to customize**, detail, and specify wood around your design vision.

Your vision. Your specifications. Made to order.

thermalprowood.com



3 OPEN JOINT RAINSCREEN

OPEN JOINT RAINSCREEN

A New Dimension in Wood Façades.

ThermalPro Wood open-joint rainscreen brings depth, rhythm, and natural warmth to exterior façades while supporting a ventilated wall assembly. Depending on the architectural intent, boards can be installed vertically or horizontally, with narrow or more pronounced open joints to create anything from a refined, linear expression to a bold, dimensional façade.

Choose from flat boards, slats, dimensional profiles, or custom-milled shapes to control shadow lines, texture, spacing, and scale. Open-joint rainscreen can be used across full building façades, feature walls, entryways, soffits, privacy screens, and architectural accents, giving designers the flexibility to carry a consistent material language throughout the project.

Available in a range of thermally modified hardwoods and softwoods, ThermalPro rainscreen is made to order in the species, dimensions, profile, and finish that support your design vision.

Over a Barrier System

Open-joint rainscreen creates a clean, contemporary façade with intentional spacing between boards, allowing the weather-resistant barrier behind the cladding to become part of the overall wall assembly. The open joints promote drainage, ventilation, and drying, while the properly specified barrier provides the primary protection against air and water intrusion.

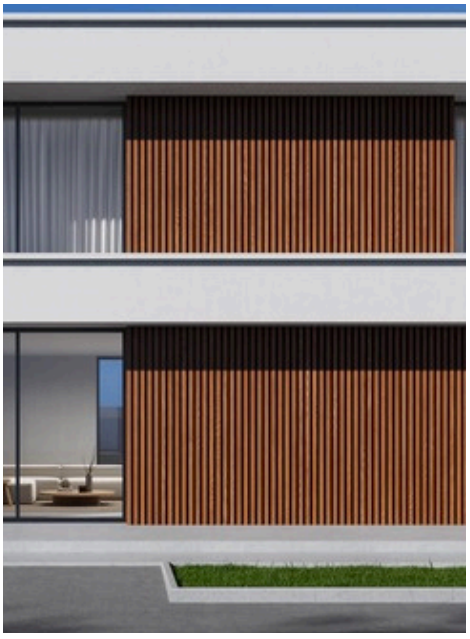

For designers, this approach offers considerable freedom in board width, spacing, orientation, and pattern. ThermalPro Wood can be installed vertically or horizontally with uniform or varied joint spacing to create subtle shadow lines, strong linear patterns, or more expressive façade compositions.

Because the barrier may be visible through the open joints, a UV-stable barrier designed specifically for open-joint rainscreen applications should be specified.



For Architectural Detail

Think beyond the façade. ThermalPro Wood rainscreen boards give architects and designers a versatile material for shaping, defining, and connecting architectural elements throughout a project. Use them to create depth at entryways, continue wood from walls to soffits, define transitions, screen private spaces, or create bold façade accents across glass walls and glazed elevations, adding warmth, contrast, and dimension to expansive surfaces.

Varying board widths, depths, spacing, and orientation allows designers to manipulate rhythm, shadow, texture, and scale—from subtle linear detailing to dramatic, sculptural expressions.

WOOD SLATTING

Screen. Shade. Define. Design with Wood.

ThermalPro Wood slatting offers architects and designers a versatile way to define spaces, create privacy, filter views, and introduce the warmth and texture of natural wood. Suitable for both exterior and interior applications, slats can function as practical screening elements or become a defining architectural feature.

Create Privacy.

Use ThermalPro slatting for **fences, gates, privacy screens, equipment enclosures, rooftop screening, pool surrounds, courtyard dividers, shade structures, pergolas, and decorative screens.**

Slatting can also be used to soften transitions between spaces, screen mechanical or service areas, and create visual separation without the mass of a solid wall.



Control the View.

Board **width, depth, spacing, and orientation** can be adjusted to control privacy, openness, light, and shadow. Tight spacing creates greater screening and privacy, while wider spacing maintains views and airflow. Vertical, horizontal, or custom patterns allow the slatting to become an intentional part of the project's architectural language.

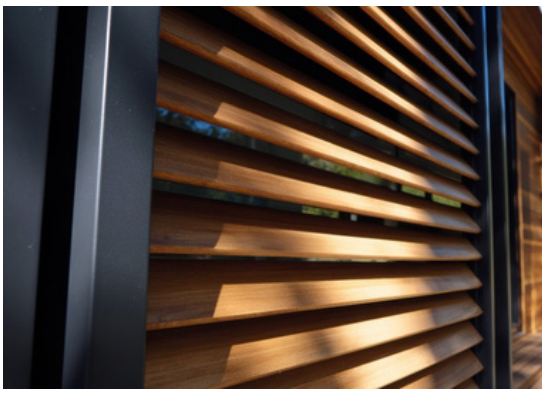

Made to Your Design.

Available in a range of thermally modified hardwoods and softwoods, ThermalPro slatting can be made to order in custom dimensions, surface textures, and finishes. From clean contemporary screens to substantial rustic fences and gates, each system can be tailored to complement the scale, material palette, and aesthetic of the project.

Standard Product Specifications

- Standard Sizes: 1x2 and 1x4 E4E or S4S
- Lengths: 8'–16'
- Species: Most hardwood and softwood species
- Orientation: Vertical or horizontal
- Chemical-Free: Process and finishes
- Finish Options: Unfinished or finished in chemical-free UV-protective colors
- Customization: species, dimensions, and finishes
- Fire Performance: Class A fire-retardant available
- Applications: Interior and exterior

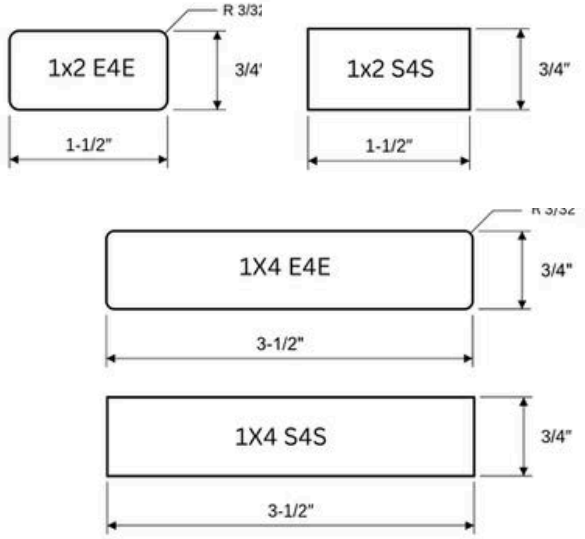

TRIM & CORNERS

Complete the Look

Create a cohesive exterior with ThermalPro Wood matching trim and corner boards, made to complement your rainscreen in the same species and finish. Available in a range of dimensions and made-to-order sizes, trim and corner boards provide a coordinated solution for windows, doors, transitions, outside corners, and architectural details.

Finish: Surfaced 4 Sides Smooth
Spec | BIM files: email marketing@spartanforest.com

CORNER BOARDS

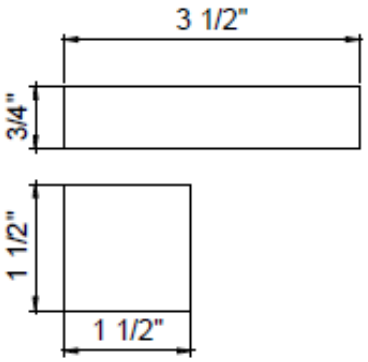



TRIM SIZES



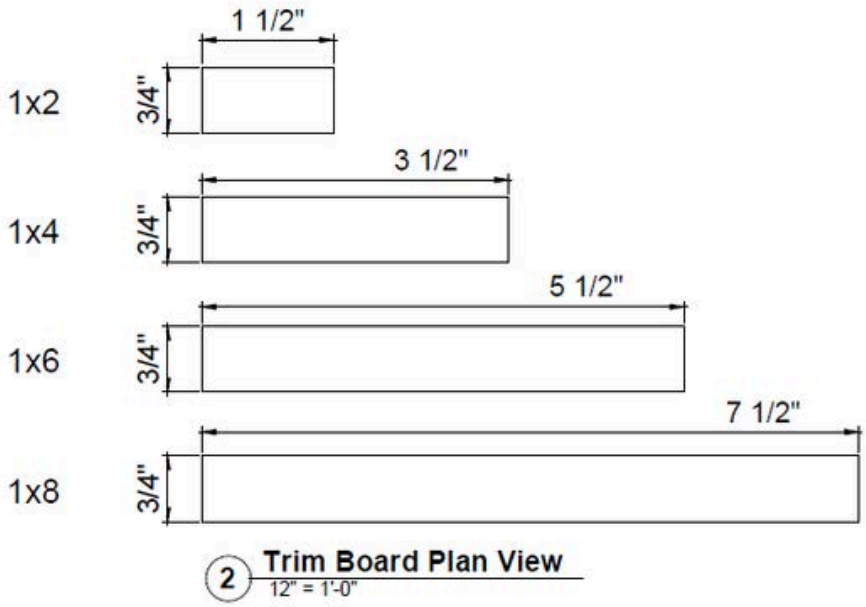

2 Trim Board Plan View
12" = 1'-0"

STANDARD SPECIES

Our standard thermally modified rainscreen and slatting species offer the durability needed for applications. requiring the utmost durability. However, we do offer a broad range of hardwoods and softwoods—contact us to explore additional species for your design.

SOFTWOODS



Douglas Fir

Known for its strength, straight grain, and warm character, modified Doug Fir is well-suited for larger-scale applications, substantial profiles, timbers, and architectural elements.



Southern Yellow Pine

With its bold grain, natural warmth, and excellent stainability, Southern Yellow Pine offers exceptional versatility for architectural cladding. It responds beautifully to stains, oils, and custom finishes.

HARDWOODS



Ash

A premium North American hardwood, Ash combines exceptional durability with a bold, distinctive grain and rich, refined appearance. Its strength and dimensional stability make it ideal for demanding applications, while its pronounced grain creates visual depth and character. An excellent choice for high-end applications.



Poplar

A lightweight yet durable hardwood, Poplar develops a rich tone when modified, with subtle grain and natural variation. Its combination of performance, lighter weight, and approachable price point makes it a versatile alternative to premium hardwoods for cladding, soffits, façades, and other architectural applications.

FINISHES

ThermalPro Wood rainscreen and slatting can be factory prefinished with Sansin or Cutek® finishing systems in a range of color options. Field-applied finishes can also be used, including products formulated for thermally modified wood or exotic hardwoods, with the finish selected for the specific application. Sanding is required before applying any coating or oil to ensure proper penetration and adhesion.

