

THERMAL

PRO

A Spartan Forest Products Brand

335 N. Constitution Avenue
New Freedom, PA 17349
P: 336-574-0111 | sales@thermalprowood.com
thermalprowood.com

PORCH & CEILING PRODUCTS

THERMAL PRO





ADVANCING THE WAY WOOD IS MODIFIED

Hydrolysis 2.0 Thermal Modification Process

Thermal modification has long been used to improve the performance of wood. Hydrolysis 2.0 takes that technology further. By combining lower temperatures with controlled pressure, it provides a more precise approach to modifying wood at the cellular level.

From High Heat to Controlled Modification

Traditional thermal modification relies on extremely high temperatures to transform the wood. Hydrolysis 2.0 takes a different approach—using high pressure to accelerate the process while reducing the temperature required for modification. The result is a more controlled process with less thermal stress than conventional high-heat treatment.

Better Performance Starts With a Better Process

Hydrolysis 2.0 is engineered to address some of the limitations associated with conventional thermal modification:

- Up to 50% less brittleness compared with conventional high-temperature processing
- Improved structural integrity by reducing damage to the wood's cellulose fibers
- Better machinability for milling, profiling, and fabrication
- More consistent modification from surface to core
- Reduced thermal stress throughout the material
- Lower energy requirements than traditional high-temperature processes

The result is a thermally modified material that is stronger, more workable, and more predictable.



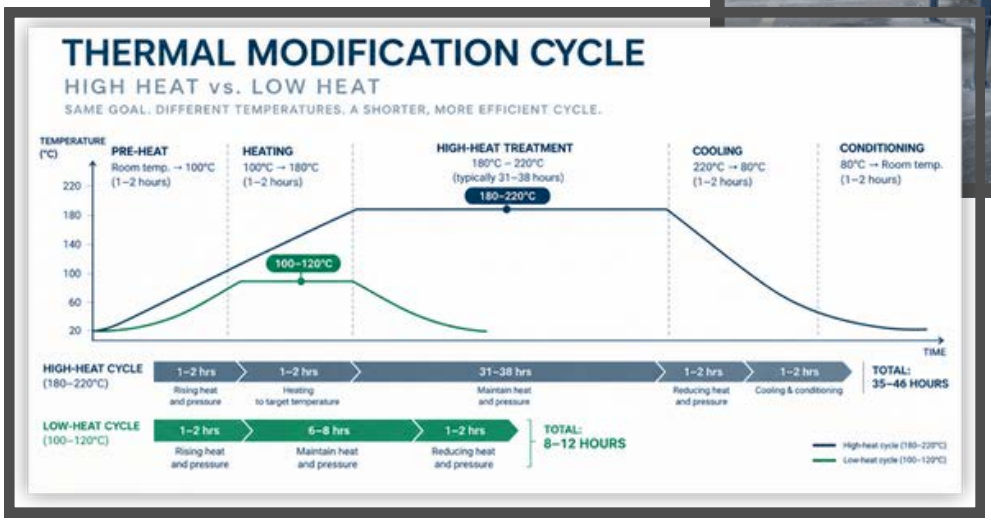

ENHANCED BENEFITS



Increased Durability

Lower-temperature processing reduces damage to the wood's cellular structure, preserving more of its natural strength while still delivering the moisture resistance and decay protection of thermal modification. The result is tougher, less brittle wood built for long-term performance.



Improved Aesthetics

Lower-temperature modification preserves more of the wood's natural color, grain, and character, giving designers greater control over the final aesthetic while delivering enhanced stability and durability.



More Species

Reduced thermal stress allows ThermalPro to modify a broader range of wood species that may not tolerate conventional high-heat processing—giving architects and designers access to lighter colors, rustic grades, and greater natural character.



Larger Dimensions

High pressure drives modification deep and evenly through the wood, while lower temperatures reduce the risk of overheating the exterior. This combo enables thorough modification of larger dimensions, including timbers up to 8", expanding possibilities for substantial architectural elements.

Movement Resistant

Weather Resistant

Non-Toxic

Longer Lifespan

High Solar Index

Sustainable & Renewable

Why Specify ThermalPro Wood?

More species. Larger dimensions. Made for your design.
ThermalPro Wood combines the beauty of natural wood with **advanced performance** and made-to-order flexibility. From species and dimensions to custom profiles and finishes, we work with architects and designers to create solutions tailored to the project—not limited by a standard product line.

Our low-temperature, high-pressure technology delivers a more stable, durable, and workable material with greater **freedom to customize**, detail, and specify wood around your design vision.

Your vision. Your specifications. Made to order.

thermalprowood.com

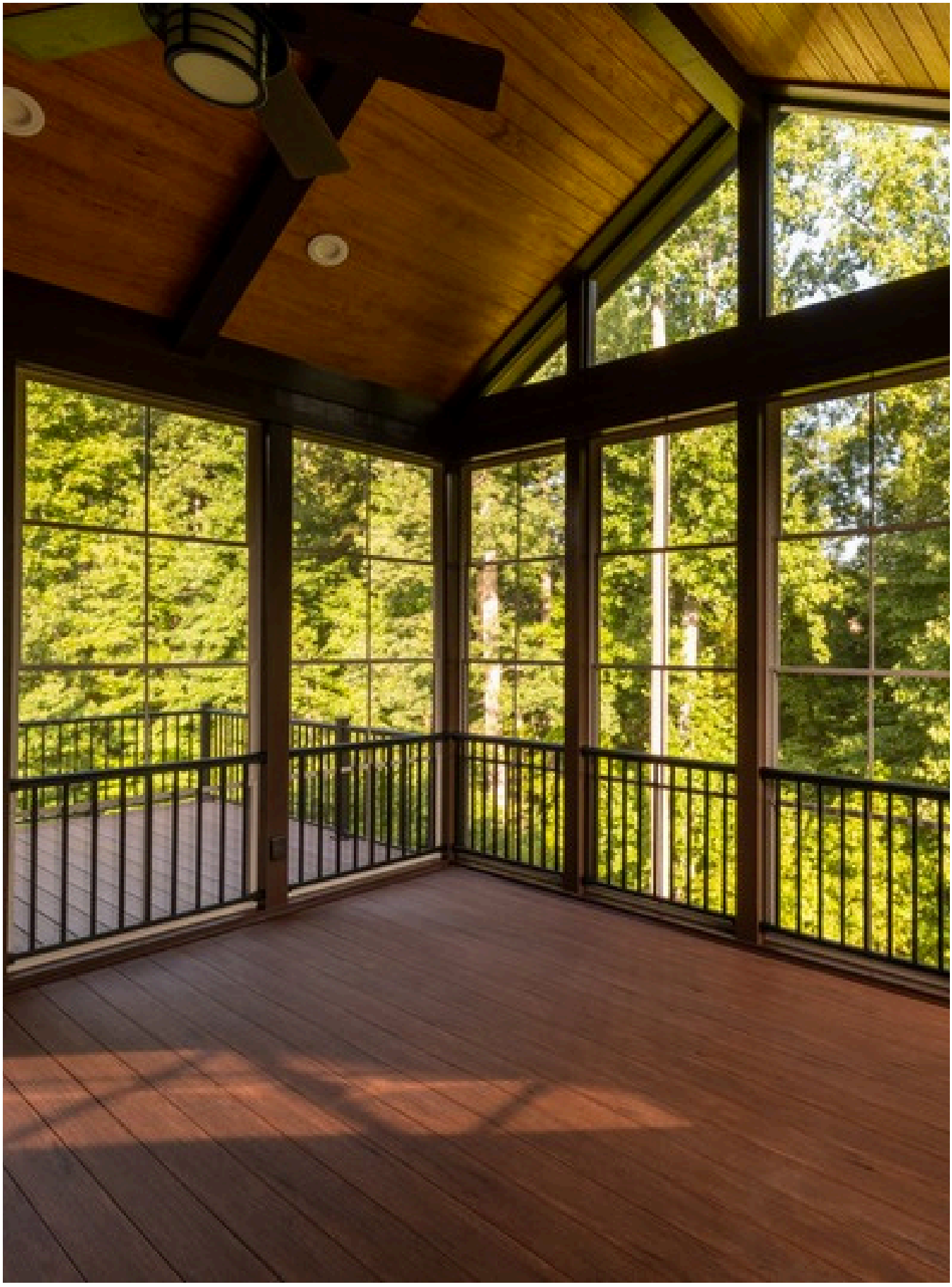

3 PORCH FLOORING & CEILING

PORCH FLOORING & CEILINGS

Bring the warmth and character of natural wood to covered outdoor spaces with ThermalPro Wood porch flooring and ceilings. Available in a range of species, profiles, and custom finishes, our thermally modified wood offers enhanced stability and durability for demanding exterior applications.

ThermalPro provides the flexibility to create distinctive porch ceilings and flooring that complement virtually any architectural style.

Availabe in all ThermalPro Wood softwood and hardwood species.



Shown: Ash



Southern Yellow Pine
Versatile, durable, cost-effective, and highly stainable—ideal for a wide range of porch applications.

FLOORING PROFILES

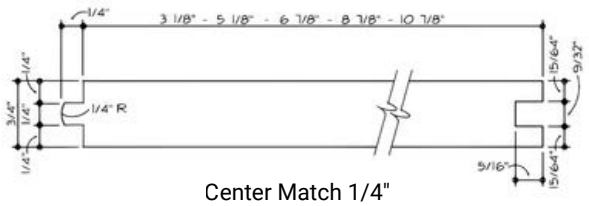

Center Match 1/4"

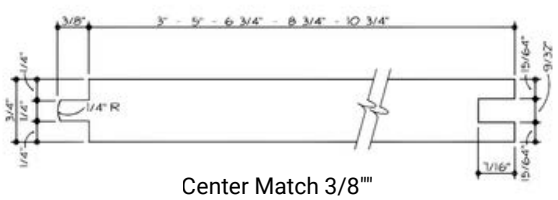

Center Match 3/8""

CEILING PROFILES

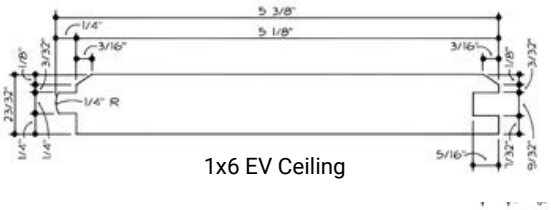

1x6 EV Ceiling

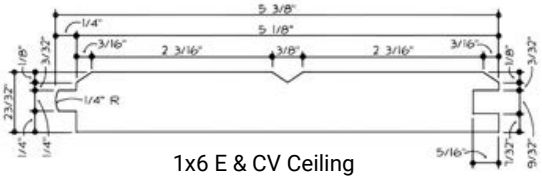

1x6 E & CV Ceiling

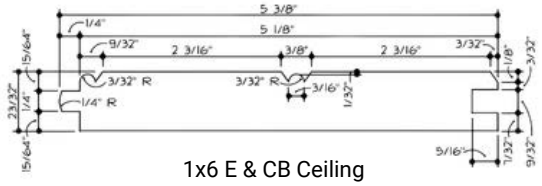

1x6 E & CB Ceiling

STANDARD SPECIES

Our standard thermally modified porch flooring and ceiling species offer the durability needed for high-traffic pedestrian applications. However, we do offer a broad range of hardwoods and softwoods—contact us to explore additional species for your design.

SOFTWOODS



Douglas Fir

Known for its strength, straight grain, and warm character, modified Doug Fir is well-suited for larger-scale applications, substantial profiles, timbers, and architectural elements.



Southern Yellow Pine

With its bold grain, natural warmth, and excellent stainability, Southern Yellow Pine offers exceptional versatility for architectural cladding. It responds beautifully to stains, oils, and custom finishes.

HARDWOODS



Ash

A premium North American hardwood, Ash combines exceptional durability with a bold, distinctive grain and rich, refined appearance. Its strength and dimensional stability make it ideal for demanding applications, while its pronounced grain creates visual depth and character. An excellent choice for high-end applications.



Poplar

A lightweight yet durable hardwood, Poplar develops a rich tone when modified, with subtle grain and natural variation. Its combination of performance, lighter weight, and approachable price point makes it a versatile alternative to premium hardwoods for cladding, soffits, façades, and other architectural applications.

FINISHES

ThermalPro Wood porch flooring and ceilings can be factory prefinished with Sansin or Cutek® finishing systems in a range of color options. Field-applied finishes can also be used, including products formulated for thermally modified wood or exotic hardwoods, with the finish selected for the specific flooring or ceiling application. Sanding is required before applying any coating or oil to ensure proper penetration and adhesion.



TRIM & CORNERS

Complete the Look

Create a cohesive exterior with ThermalPro Wood matching trim and corner boards, made to complement your porch in the same species and finish. Available in a range of dimensions and made-to-order sizes, trim and corner boards provide a coordinated solution for windows, doors, transitions, corners, and architectural details.

Finish: Eased 4 Edges Smooth
Spec | BIM files:
marketing@spartanforest.com

CORNER BOARDS

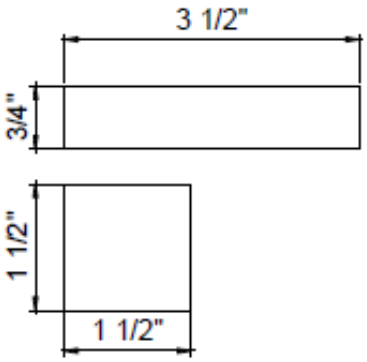



TRIM SIZES



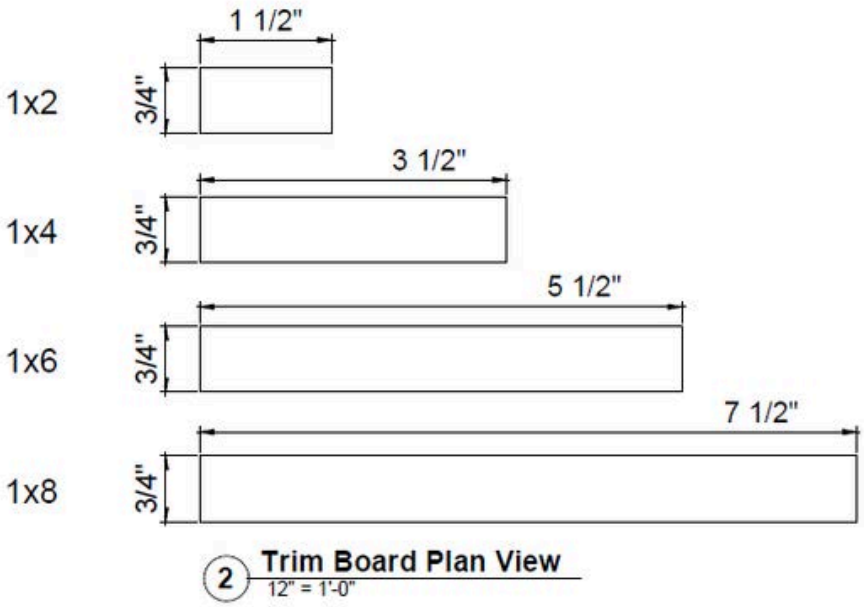

2 Trim Board Plan View
12" = 1'-0"