THERMAL
PRO

# Standard Millwork
# Profiles


Cladding . . . . . Page 1
Porch & Ceiling . . . . . Page 4
Rainscreen . . . . . Page 6
Corners & Trim . . . . . Page 7
Decking . . . . . Page 8

# Standard Profiles
# Cladding

## Tongue & Groove

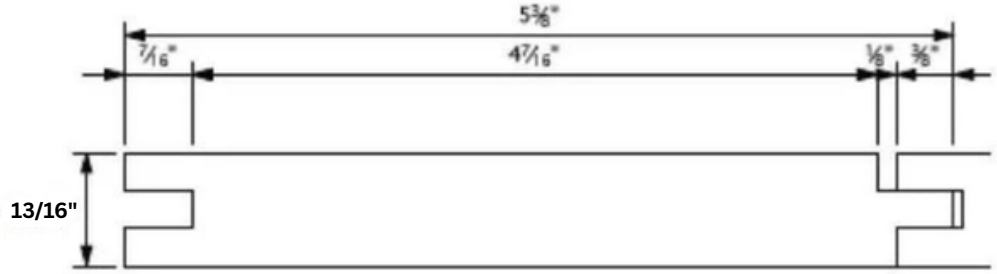


Nickel Gap

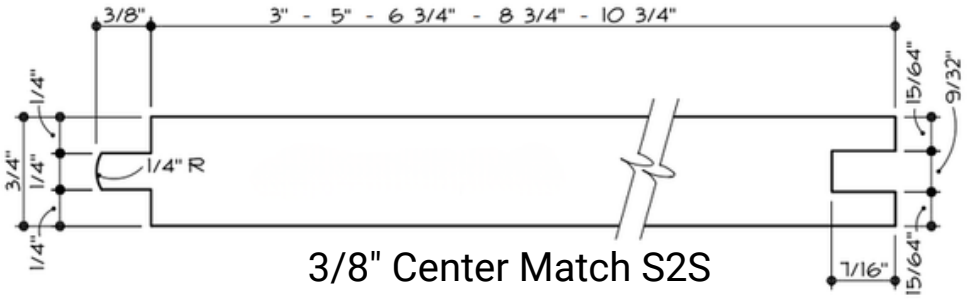


3/8" Center Match S2S

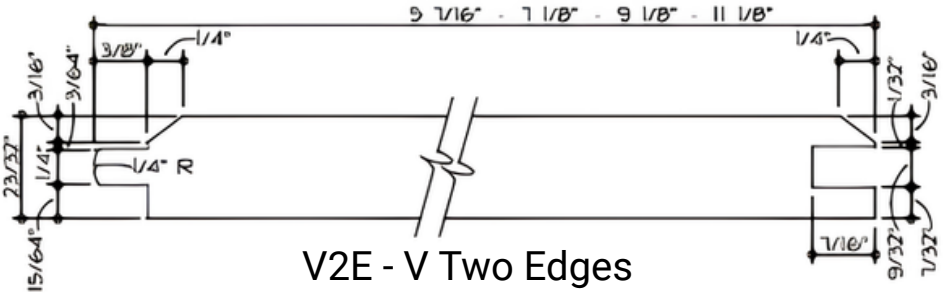


V2E - V Two Edges

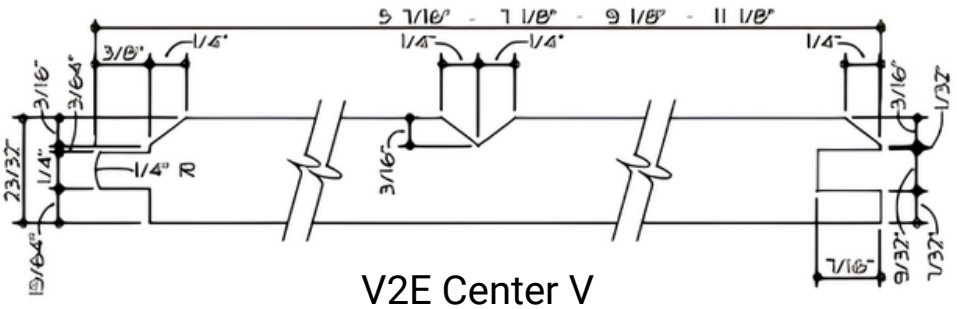


V2E Center V

All cladding includes back relief grooving

# Standard Profiles
# Cladding

THERMAL PRO

## Lap Profiles

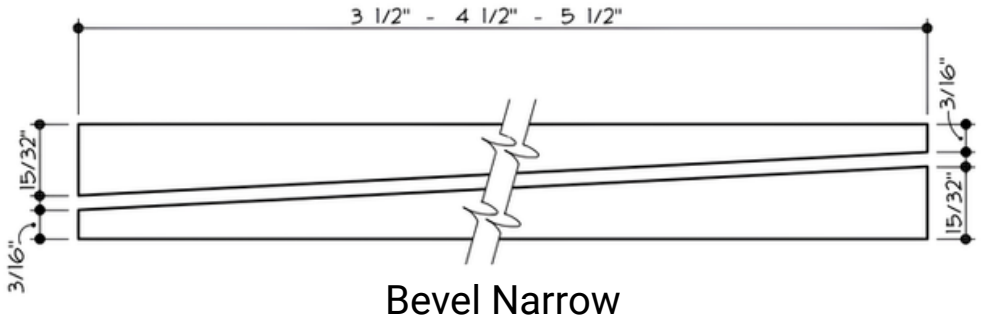


Bevel Narrow

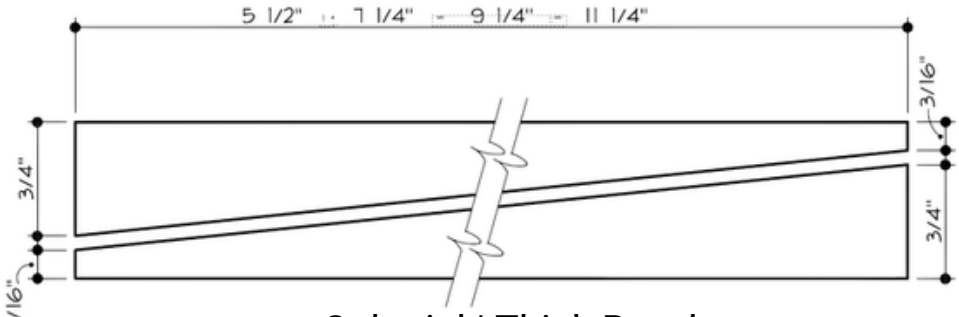


Colonial | Thick Bevel

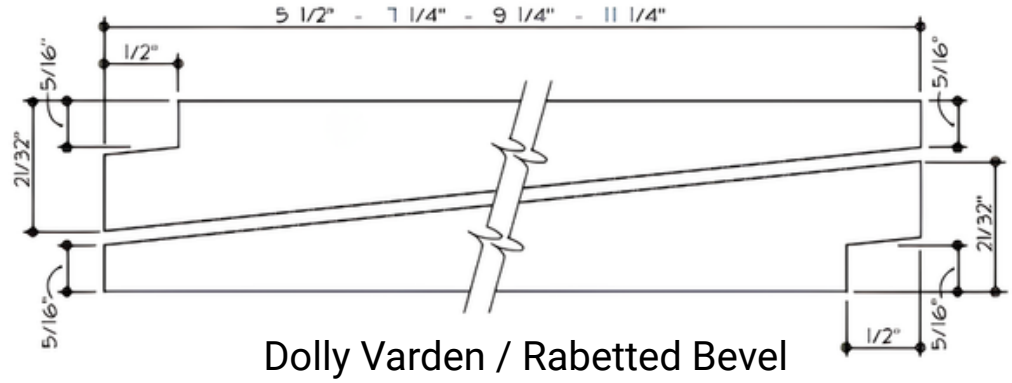


Dolly Varden / Rabetted Bevel

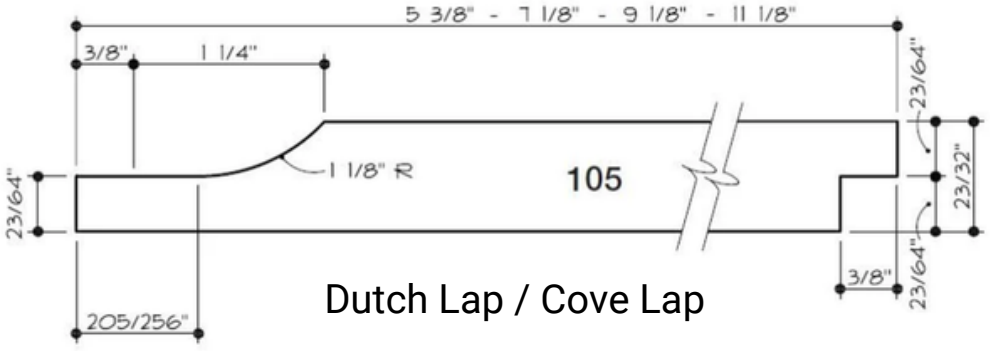


Dutch Lap / Cove Lap

All cladding includes back relief grooving

# Standard Profiles
# Cladding

## Lap Profiles

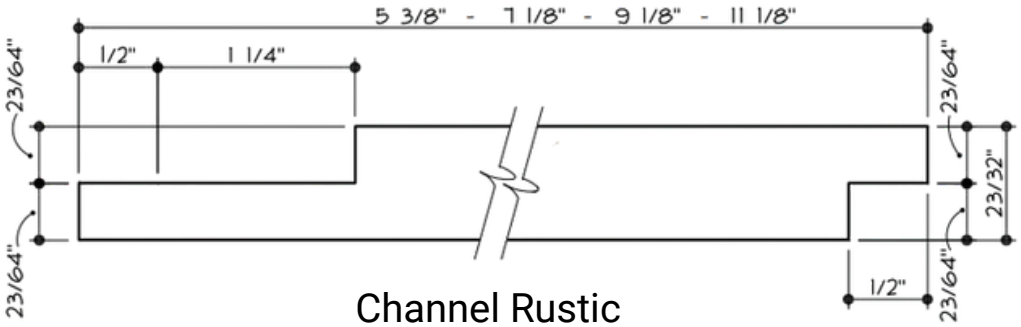


Channel Rustic

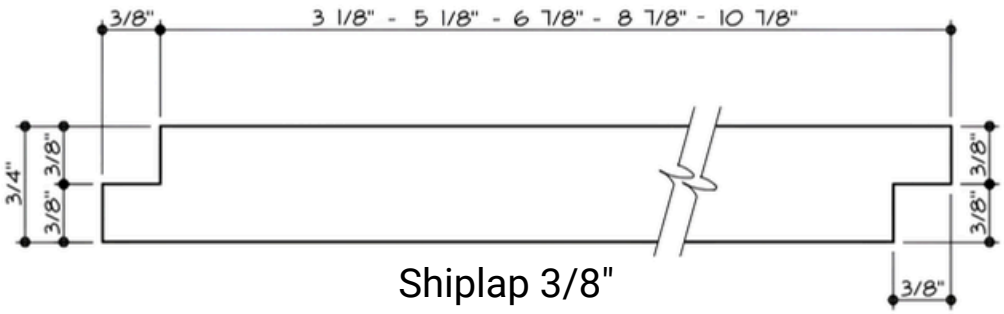


Shiplap 3/8"

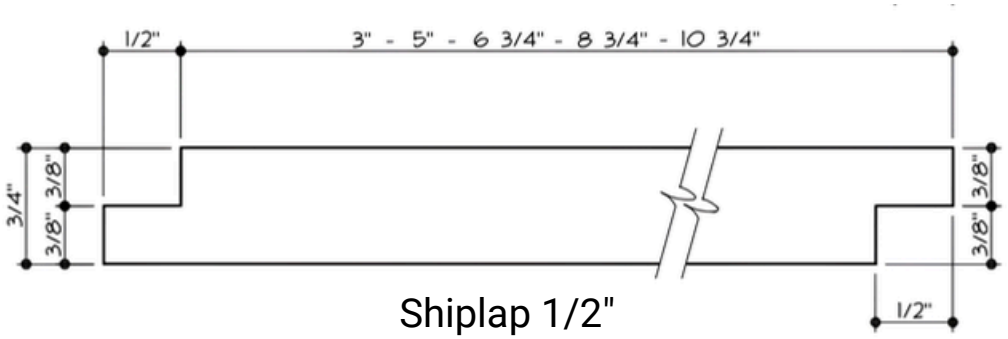


Shiplap 1/2"

All cladding includes back relief grooving

# Standard Profiles
# Flooring

## Porch Flooring

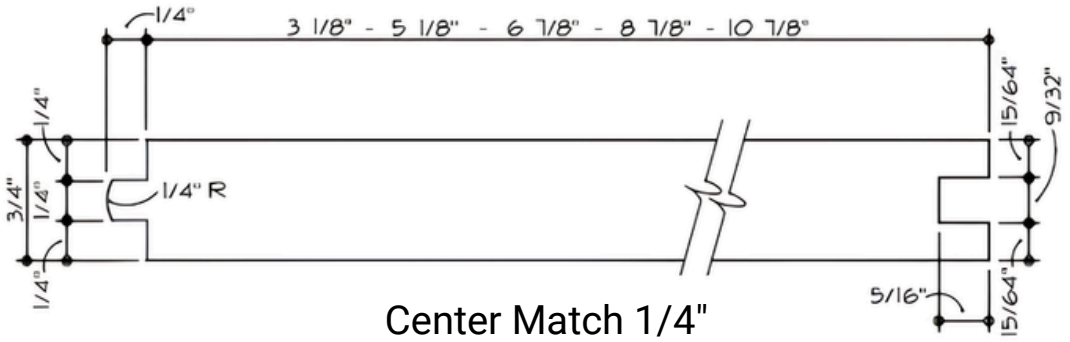


Center Match 1/4"

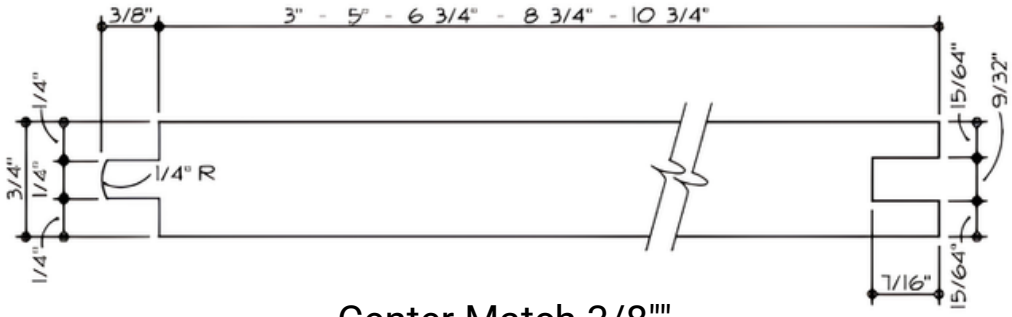


Center Match 3/8""

All flooring includes back relief grooving

# Standard Profiles
## Ceiling

## Porch Ceiling

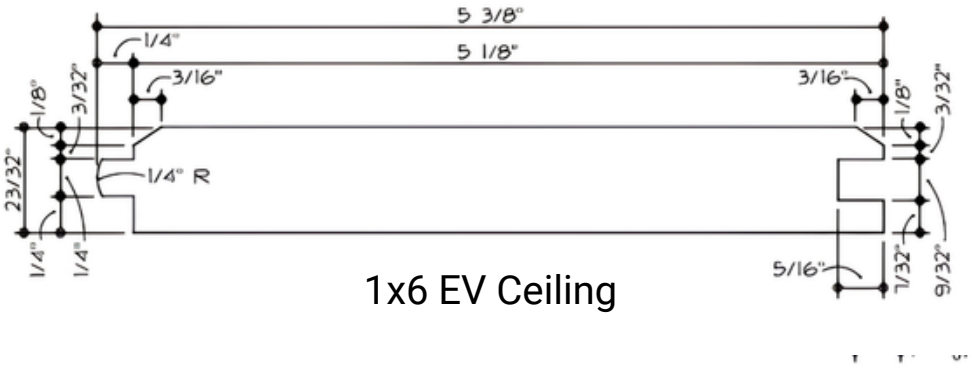


1x6 EV Ceiling

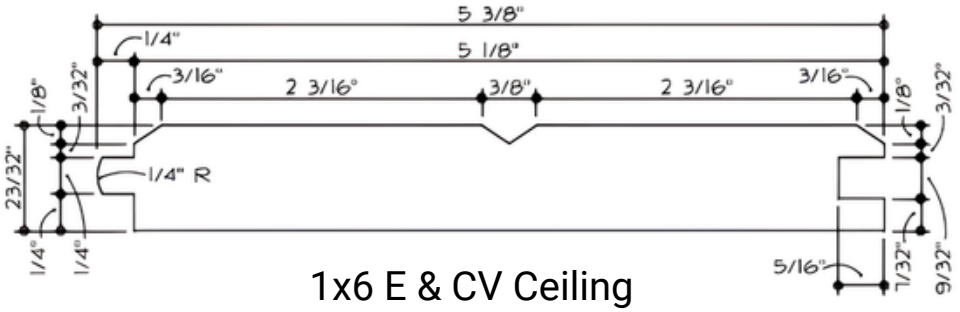


1x6 E & CV Ceiling

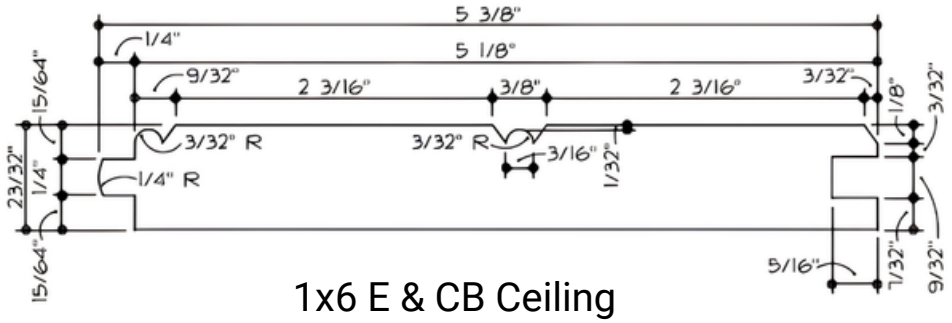


1x6 E & CB Ceiling

# Standard Profiles
## Rainscreen

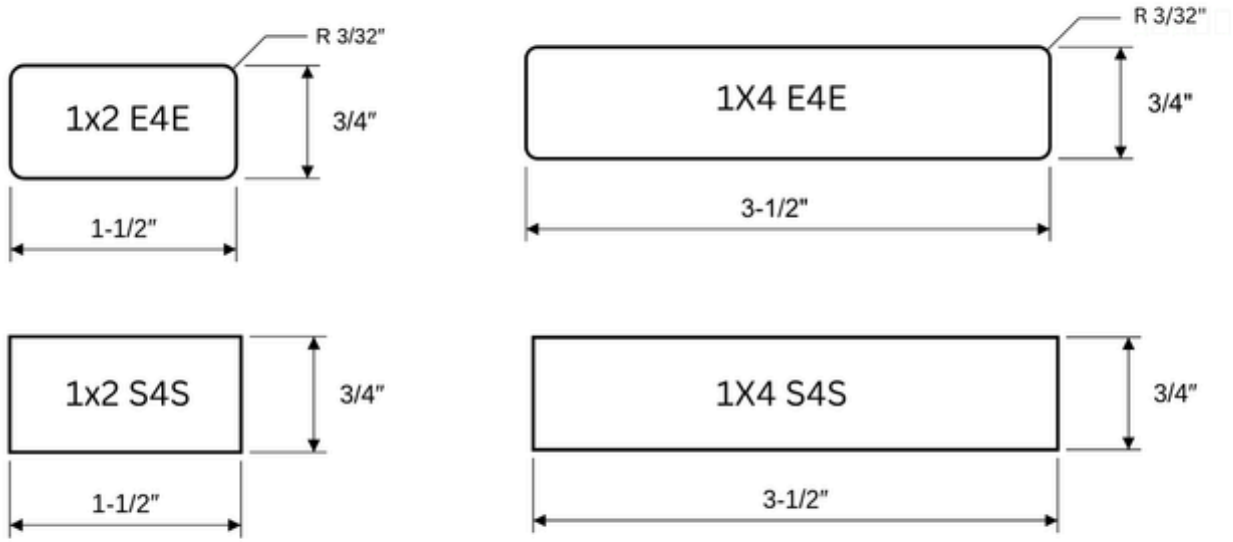

# Standard Profiles
## Corners & Trim

THERMAL PRO

### CORNER BOARDS

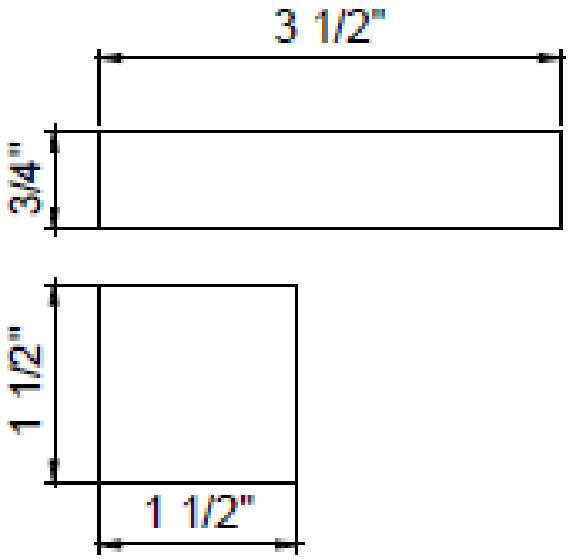




### TRIM BOARDS



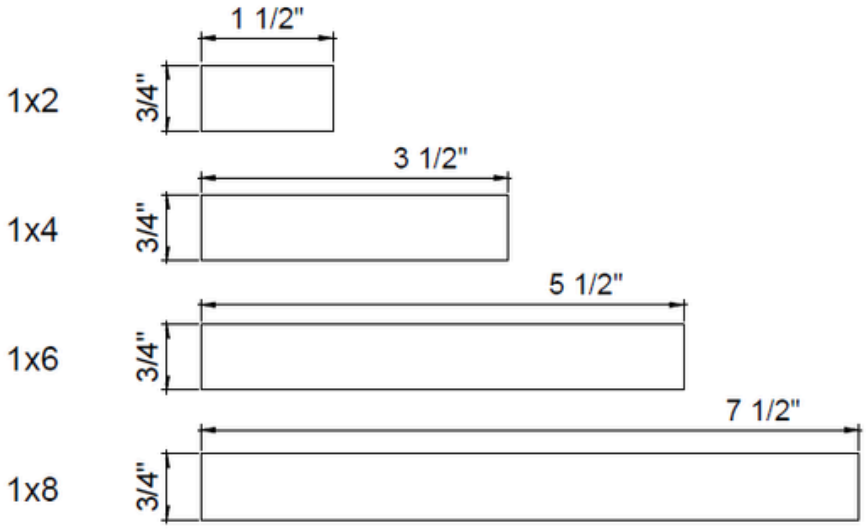

# Standard Profiles
## Decking

THERMAL PRO

### Softwood Decking

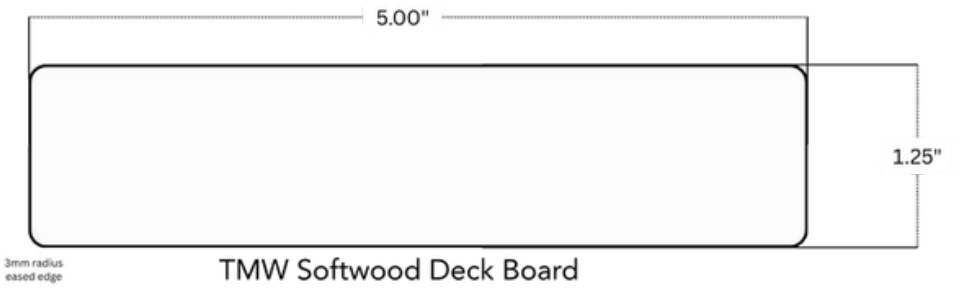


TMW Softwood Deck Board

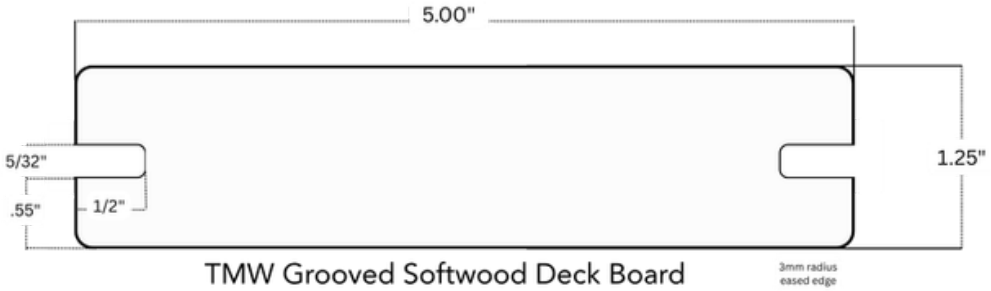


TMW Grooved Softwood Deck Board

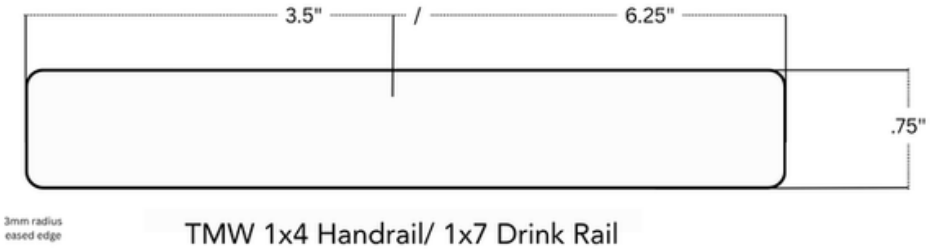


TMW 1x4 Handrail/ 1x7 Drink Rail

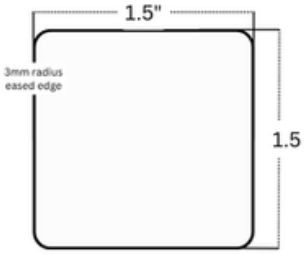


2x2 Baluster.
Lengths 36" or 42"

# Standard Profiles
## Decking

THERMAL PRO

### Hardwood Decking

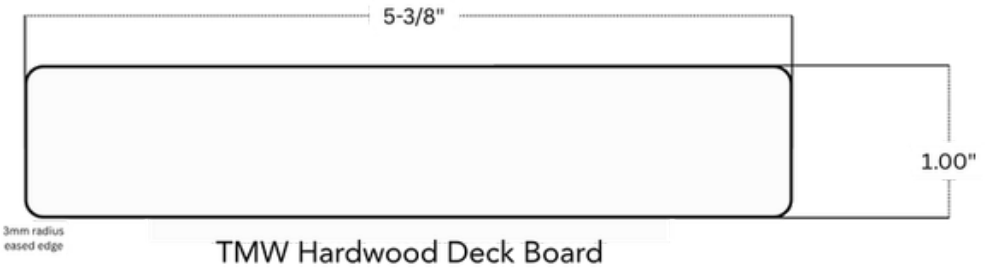


TMW Hardwood Deck Board

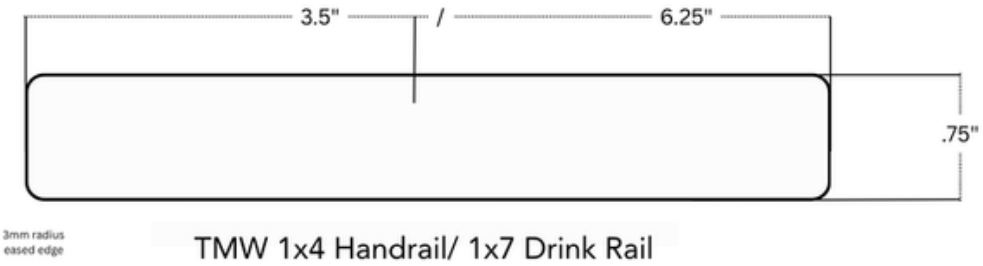


TMW 1x4 Handrail/ 1x7 Drink Rail



# THERMAL

## PRO